REV.	SPECIFICATION	ECN NO.	APPD.
R1		ECN260737	

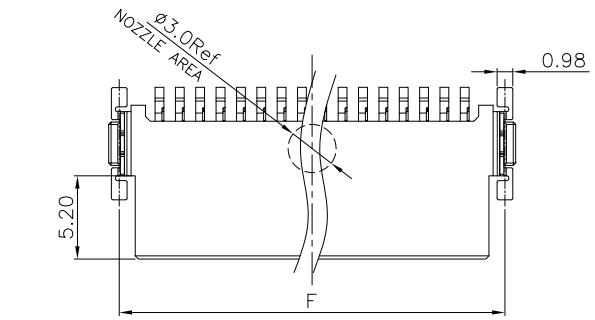

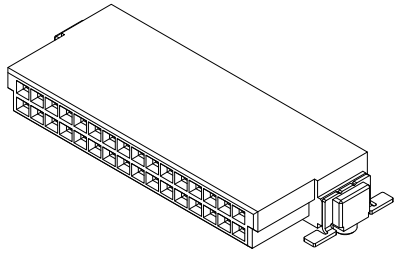

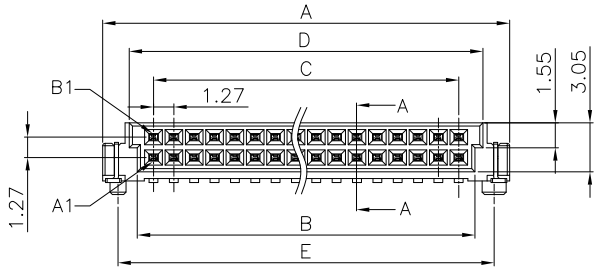

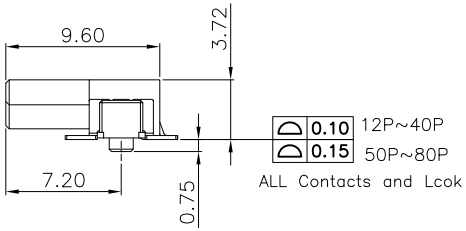

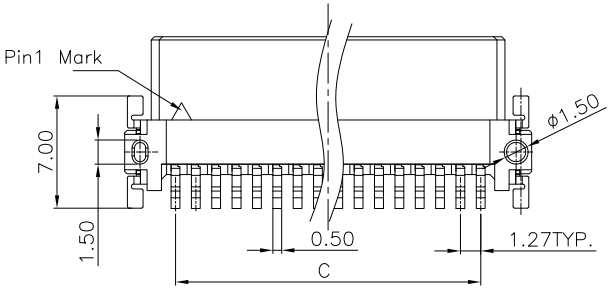

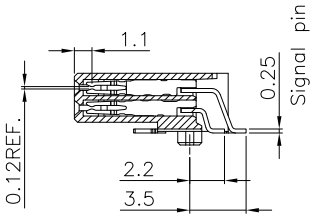

SECTION A–A
SCALE 1:1

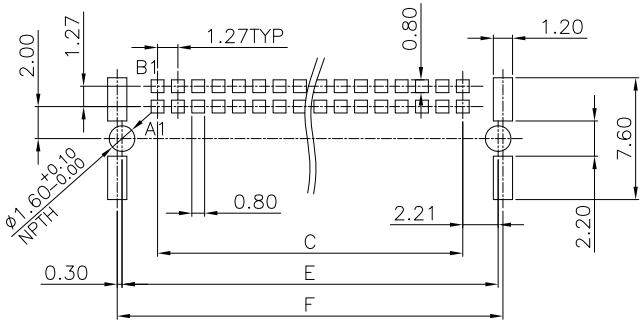

P.C. Board Layout (TOP View)
(Tolerance ±0.05)

2321-A xx F C xx D R P T

- Series: 2321-A
- No. of Positions: xx
- F: Female
- C: Selective Gold Plated
- 00: Gold Flash
  05: 5μ"
  10: 10μ"
  30: 30μ"
- D: SMD Type
- R:Right Angle
- P: With Post
  N: Without Post
- T: Tape&Reel Package

Material and Plating:

Housing: LCP, UL94V-0 , BLACK.
Signal Contacts: Phosphor Bronze
Gold plated on Contact Area and 80u" Min Tin Plated on Solder Tail over nickel 50u" Min .
Locks: Alloy.
100u" Min Tin Plated over nickel 50u" Min .

Electrical Characteristics:

Current Rating: 1.7A
Dielectric Withstanding Voltage: AC 500V For 1 minute.
Insulator Resistance: 1000MΩ min. at DC 500V.
Contact Resistance: 25mΩ max. at DC 100mA.
Operating Temperature: -55°C~+125°C.

***RoHS & HF Compliant**

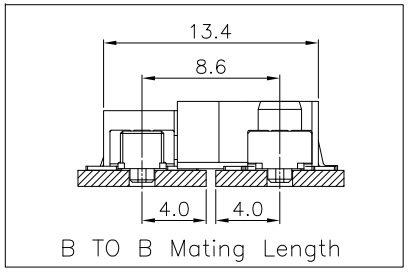

B TO B Mating Length

"*"Available Position

	Pos.	Dimension A	B	C	D	E	F
	10	11.43	7.10	5.08	8.10	9.50	10.10
	12	12.7	8.37	6.35	9.37	10.77	11.37
	16	15.24	10.91	8.89	11.91	13.31	13.91
	20	17.78	13.45	11.43	14.45	15.85	16.45
*	24	20.32	15.99	13.97	16.99	18.39	18.99
	26	21.59	17.26	15.24	18.26	19.66	20.26
	30	24.13	19.80	17.78	20.80	22.20	22.80
*	32	25.40	21.07	19.05	22.07	23.47	24.07
	40	30.48	26.15	24.13	27.15	28.55	29.15
	50	36.83	32.50	30.48	33.50	34.90	35.50
	68	48.26	43.93	41.91	44.93	46.33	46.93
	80	55.88	51.55	49.53	52.55	53.95	54.55

Tolerances	Dwg. No.	2321-D0000-007	Title: 2321–A Series 1.27mm Pitch SMC Male Connector Two Row Right Angle SMD Type	OUPIIN ELECTRONIC(KUNSHAN) CO., LTD.
x = ±0.50	Projection			P/N: 2321–AxxFCxxDRPT
.x = ±0.25	Unit mm	Scale 1:1		SHEET 1/1 Ver.No. R1
.xx = ±0.15	Drawn By	GYJ 07/22'26		