REV.	SPECIFICATION	ECN NO.	APPD.

Material:
Housing(Bottom): PA9T, UL94V-0.
(Top): PBT, UL94V-0.
Contacts: Phosphor Bronze.Gold Plated on Contact Area and Gold Flash on solder tail over Nickel 50u"
Shield: Brass, Nickel plated.

Electrical Characteristics:
Voltage Rating: AC 150V.
Current Rating: 1.5 AMP.
Dielectric Withstanding Voltage: 1000V for 1 minute.
Insulator Resistance: 500MΩ min.
Contact Resistance: 30mΩ max.
Operating Temperature: -40°C~+85°C.
***RoHS Compliant**

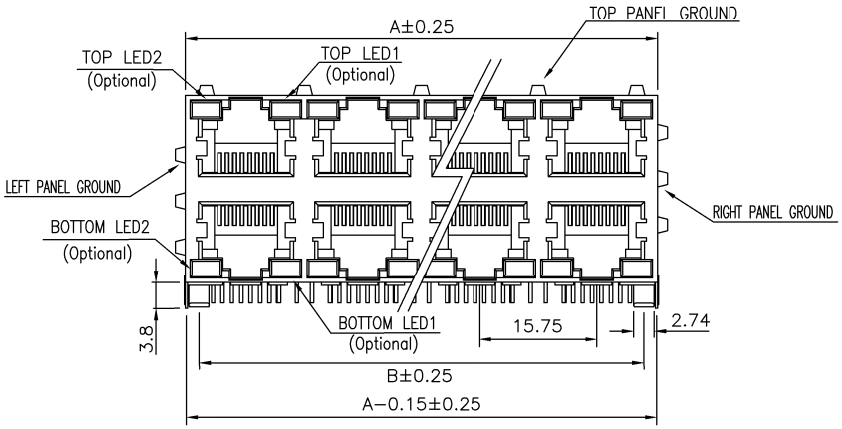

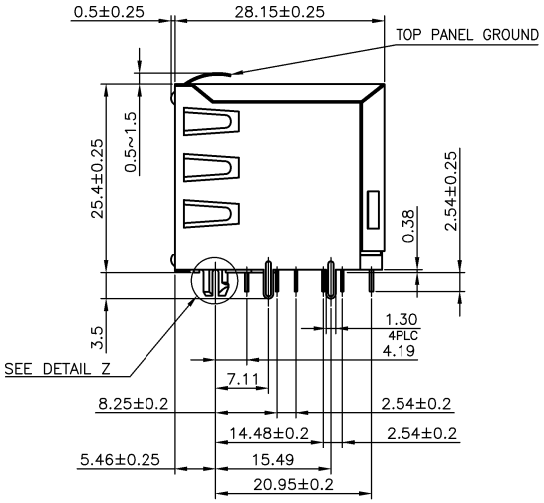

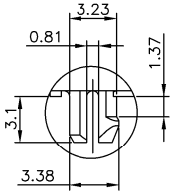

DETAIL Z
SCALE 2:1

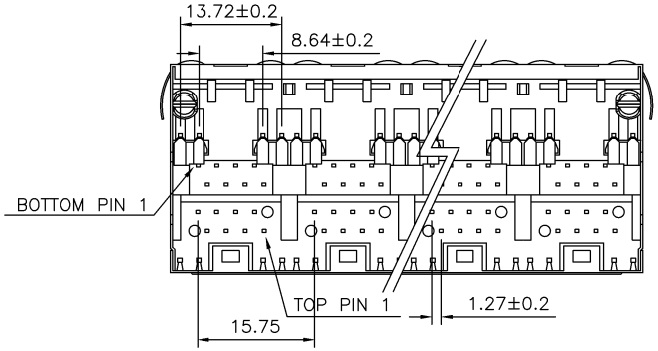

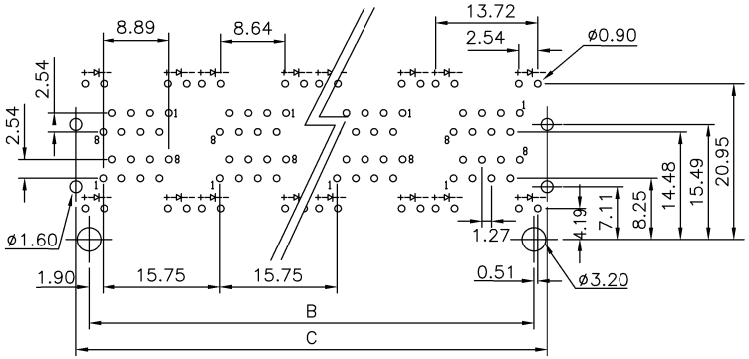

P.C. Board Layout

8949-ID3 8 8 x -xx S 1 x B A

Series
Position
8: 8 Contacts

2: 2X1 = 2 Ports
4: 2X2 = 4 Ports
8: 2X4 = 8 Ports
12:2X6 = 12 Ports

06:06u" Gold Plated
15:15u" Gold Plated
30:30u" Gold Plated
50:50u" Gold Plated

S: Shield

1: With Grounding

A: LED1: Green,LED2: Yellow
B: LED1: Green,LED2: Green
C: LED1: Yellow,LED2: Green
D: LED1: Yellow,LED2: Yellow
E: LED1: G+Y,LED2: Green
G: LED1: Red,LED2: Green
M: LED1: Red,LED2: G+Y
P: LED1: G+Y,LED2: G+Y

B: Black

A: Tray Package

LED SCHEMATIC

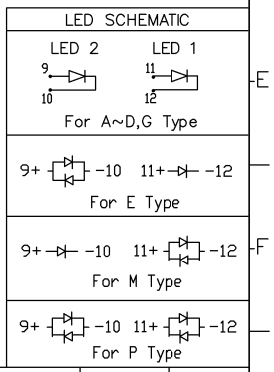

Dim \ Port	2	4	8	12
A	16.51	32.15	63.65	95.15
B	12.70	28.45	59.95	91.45
C	16.26	32.00	63.50	95.00

Tolerances	Dwg. No.	8949D02074		Title: 8949−ID3 Series RJ 45 Stacked Modular Jack With LED Right Angle Type	OUPIIN ELECTRONIC(KUNSHAN) CO., LTD.		
.x = ±0.25	Projection				P/N: 8949−ID388x−xxS1xBA		
.xx = ±0.13	Unit mm	Scale	1:N		SHEET	1/1	Ver.No. B7
.xxx= ±0.05	Drawn By	Martin 07/07'26		① 563			