REV.	SPECIFICATION	ECN NO.	APPD.

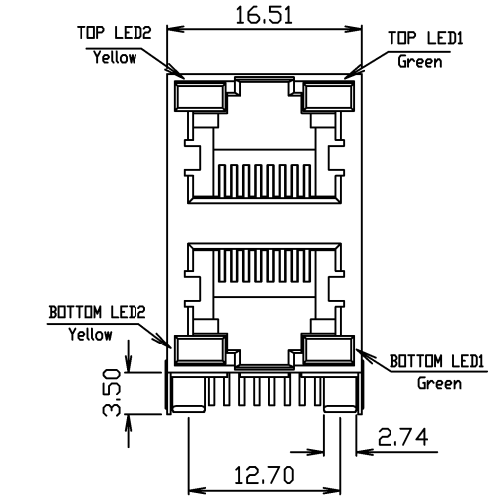

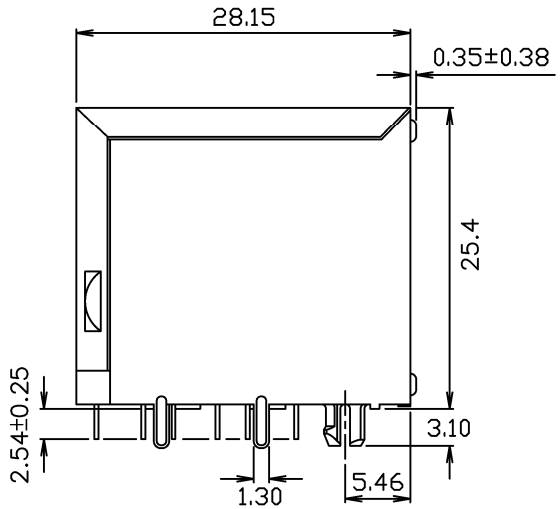

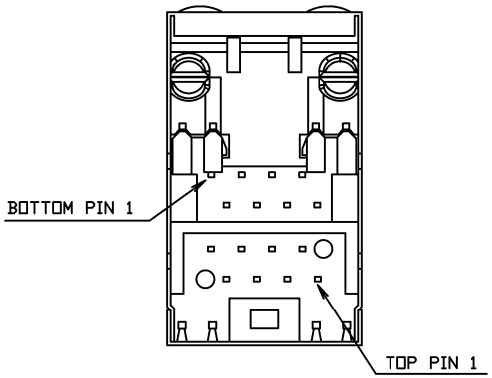

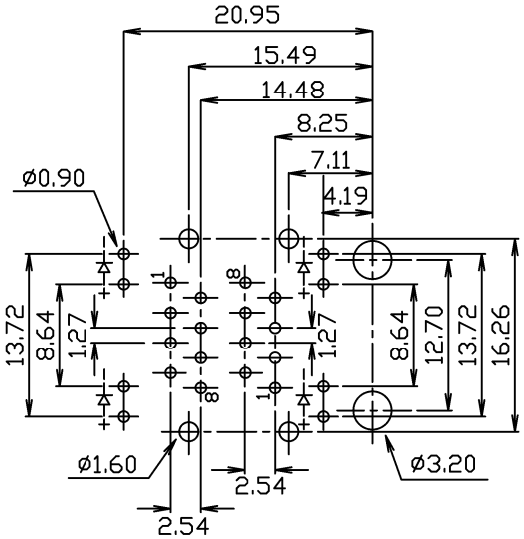

P.C.Board Layout

Material:

Housing(Bottom): PA9T, UL94V-0.
(Top): PBT, UL94V-0.
Insert Housing(Bottom): PBT, UL94V-0.
(Top): PBT, UL94V-0.
Contacts: Phosphor Bronze.Gold Plated on Contact Area and Gold Flash on solder tail over 50u" Nickel.
LED: Steel, 80u" Tin Plated.
Shell: Brass, 20u" Nickel Plated.

Electrical Characteristics:

Current Rating: 1.5 AMP.
Insulator Resistance: 500MΩ min. at DC 500V.
Contact Resistance: 30mΩ max. at DC 100mA.
Operating Temperature: -40°C~+85°C.

***RoHS Compliant**

8949-ID3 8 8 2 -06 S 0 A B A

- Series: 8949-ID3
- Position: 8
- 8: 8 Contacts loaded
- 2: 2X1= 2 Ports
- 06: 6u" Gold Plated
- S: Shield
- 0: Without Grounding
- A: LED1: Green LED2: Yellow
- B: Black
- A: Tray Package

Tolerances	Dwg. No.	8949D02132	Title: 8949-ID3 Series Stacked Ganged Jack With LED	OUPIIN ELECTRONIC(KUNSHAN) CO., LTD.		
x = ±0.5	Projection			P/N:	8949-ID3882-06S0ABA	
.x = ±0.25	Unit mm	Scale 1:1		SHEET	1/1	Ver.No. A6
.xx = ±0.15	Drawn By	Martin 07/07'26	Φ563			