REV.	SPECIFICATION	ECN NO.	APPD.
X3		------	

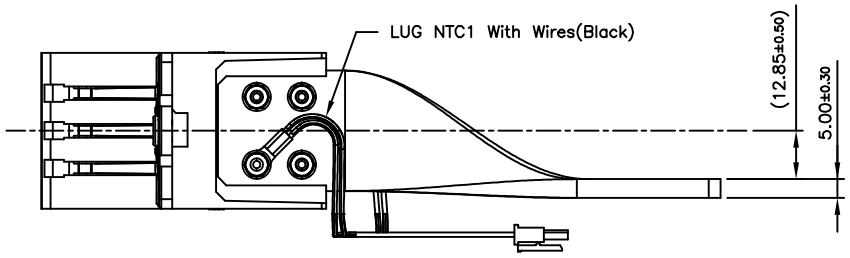

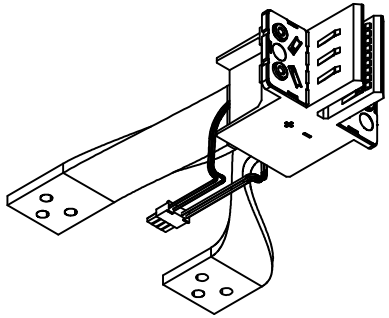

Part List	
Housing:	PA9T,UL94V-0,Black.
Contacts:	High conductivity copper, Ag Plated.
	High conductivity copper, Ag Plated.
	Stainless steel
Cable:	Woven bronze medal
	NTC With UL3398 28AWG
Test Condition	
100% Test (Open Short Miss Wire)	
*RoHS Compliant	

*Note 1: UL Label Per Bag
*Note 2:

P1	NTC No.	P2	Color
Pin1	LUG NTC1	Pin1.2	Black
Pin2	LUG NTC2	Pin3.4	Red

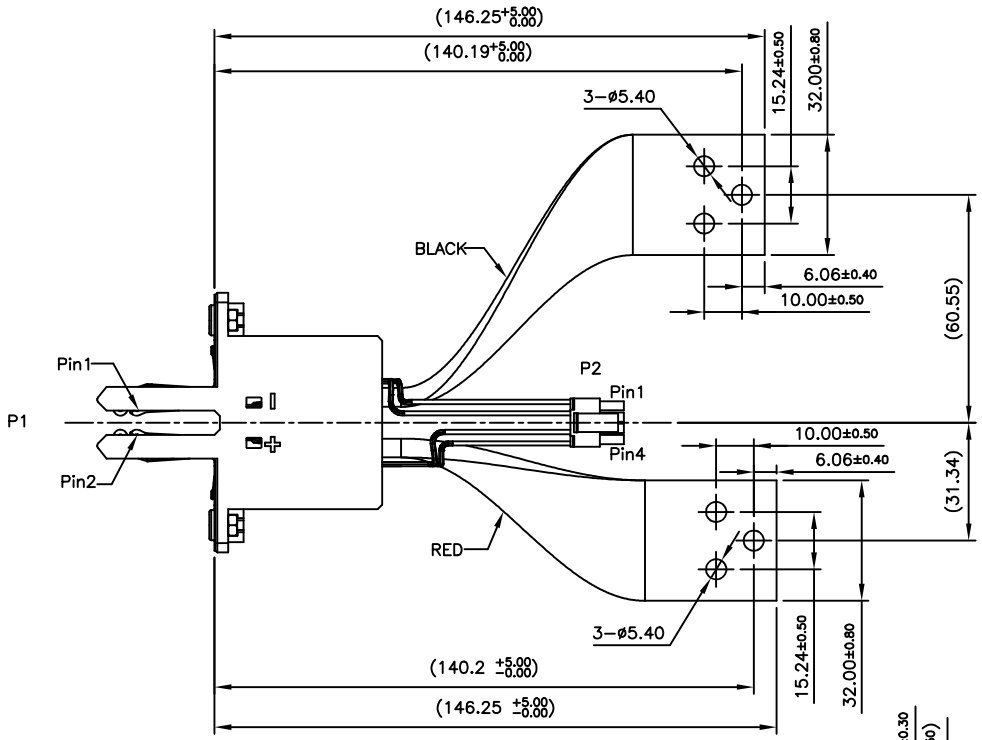

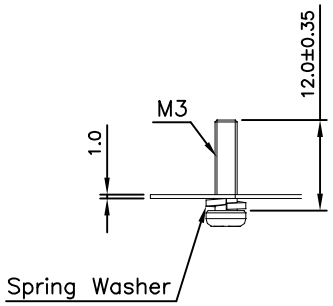

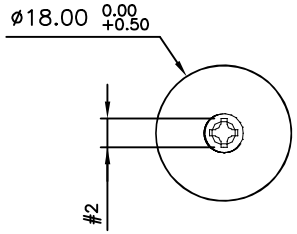

M3 Screw With Washer(3PCS)

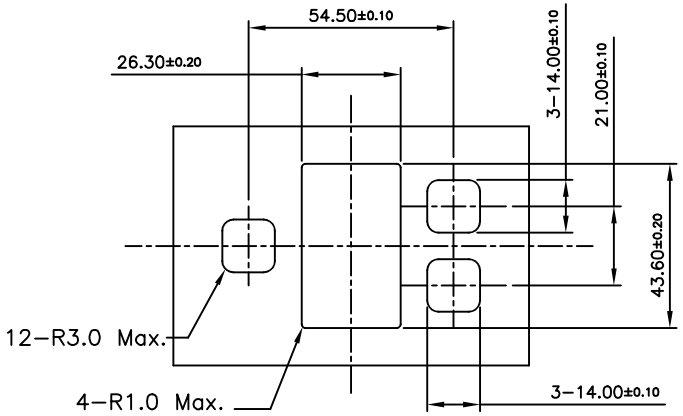

Recommended Panel Layout
Pane Thickness 1.2±0.1mm

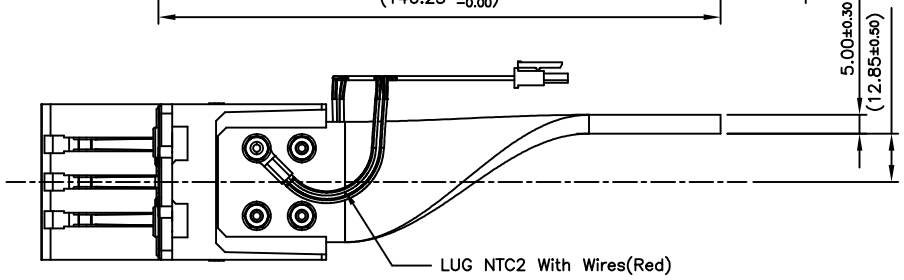

Tolerances	Dwg. No.	9120−D0000−002	Part No. 9120−2P02ABX146−A002	OUPIIN ELECTRONIC(KUNSHAN) CO., LTD.
x= ±0.5	Projection			
.x= ±0.25	Unit mm	Scale 1 : 1	Title: High Power Wire Conn.	SHEET 1/1 Ver.No. X3
.xx= ±0.15	Drawn By	Ping 05/22"25		