REV.	SPECIFICATION	ECN NO.	APPD.
R1	NEW	ECN200906	

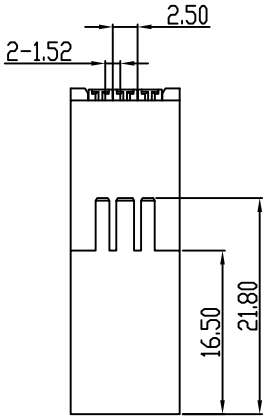

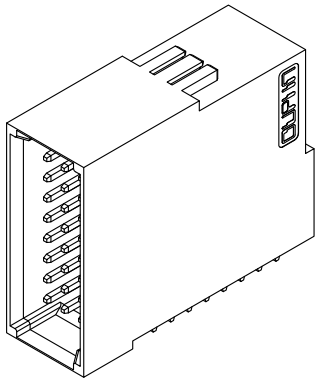

Material and Plating:

Housing: LCP, UL94V-0 , BLACK.
Molding: LCP, UL94V-0 , BLACK.
Contacts: Brass.
30u"Au+Pd/Ni on Contact Area and 80u" Min Tin Plated on Solder Tail over nickel 50u" Min .

Electrical Characteristics:

Current Rating: 3AMP.
Dielectric Withstanding Voltage:
DC 1500V For 1 minute.
Insulator Resistance:
5000MΩ min. at DC 500V.
Contact Resistance: 15.0mΩ max
Operating Temperature: -40°C~+105°C

***RoHS Compliant**

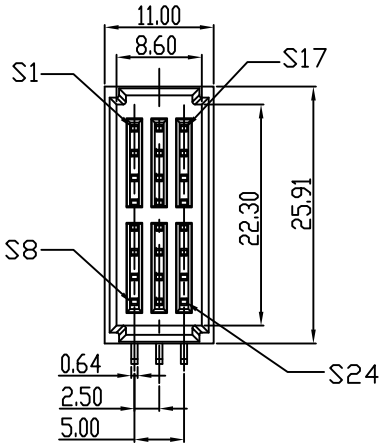

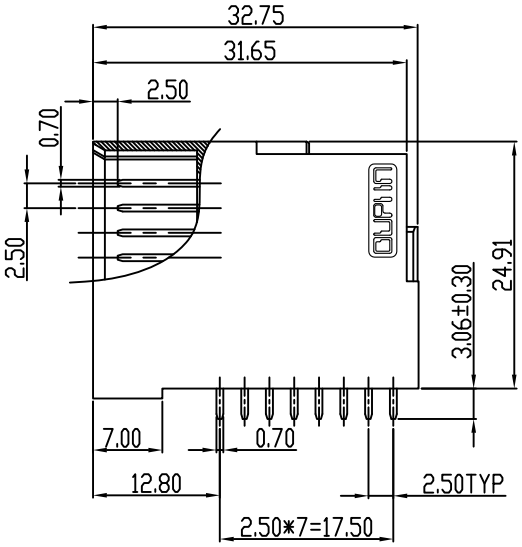

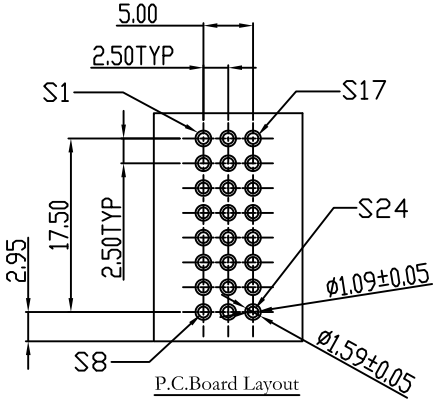

P.C.Board Layout
(Tolerance:±0.05)

9113 - D 3 S 24 CB 30 D N R A

- Series
- D: Type D
- 3: 3Row
- S: Signal Pin
- 24: Signal Pin
- CB: Contact Au+Pd/Ni Dip Tin
- 30: 30u"
- D: DIP Type
- N: Without Post
- P: With Post
- R: Right Angle Type
- A: Tray Package

Tolerances	Dwg. No.	9113-D0000-020	Title: 9113 Series Male Right-angle DIP Type	OUPIIN ELECTRONIC(KUNSHAN) CO., LTD.
x = ±0.5	Projection			P/N: 9113-D3S24CB30DNRA
.x = ±0.25	Unit mm	Scale 1:1		SHEET 1/1 Ver. No. R1
.xx = ±0.15	Drawn By	GYJ 09/01/20'		